The Large Hadron Collider (LHC) Approaches Inauguration

September 1, 2008 (HE19). Professor Lucio Rossi (CERN) presented at the meeting of the Advisory Council of IEEE/CSC (Chicago, IL, August 16, 2008) an update on the completion and inauguration of LHC, the largest superconducting system worldwide. We reproduce here some highlights of that presentation, with reference to the LHC review paper CR2, published in the Forum in July 2007.

The construction work is completed, and commissioning is proceeding with nearly 70% of the overall number of steps also completed as of August 15th. By that date, the whole accelerator ring of superconducting magnets, 27 km in length, has been cooled, most of it to the final temperature of about 1.8 kelvin, as illustrated in Figure 1. The inner triplet magnets were still cooled and reached the temperature near 30 K, the LSS magnets reached 4 K.

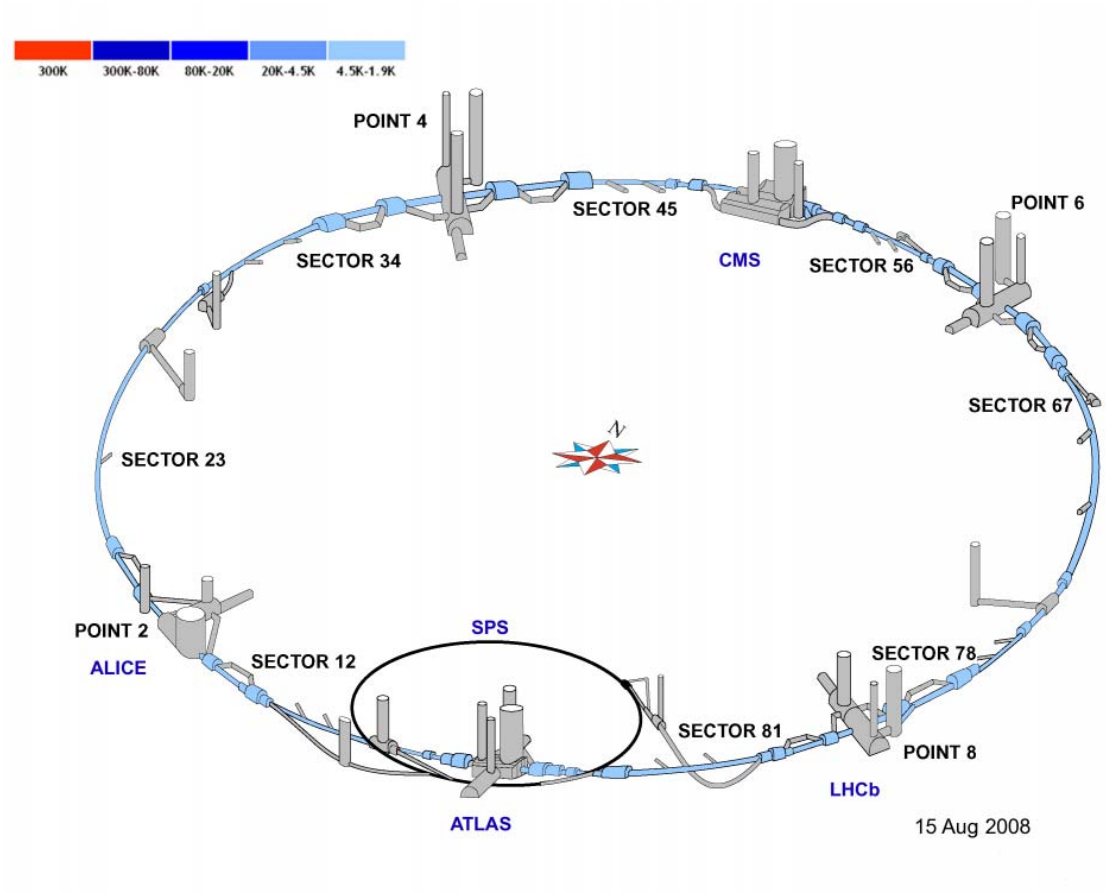

Fig. 1. Temperature of the accelerator ring as of August 15, 2008.

The first injection test was successfully conducted on August 8th, sooner than expected. The optics of the injection region is shown in Figure 2, the beam of the first shot imaged at Point 3 (between 2 and 4, see Fig. 1) is shown in Figure 3, and the first beam trajectory in Figure 4. The conclusion is that the machine optics works, made possible by good magnetic design, proper fields and polarities, aperture, alignment, instrumentation, controls, preparation and execution.

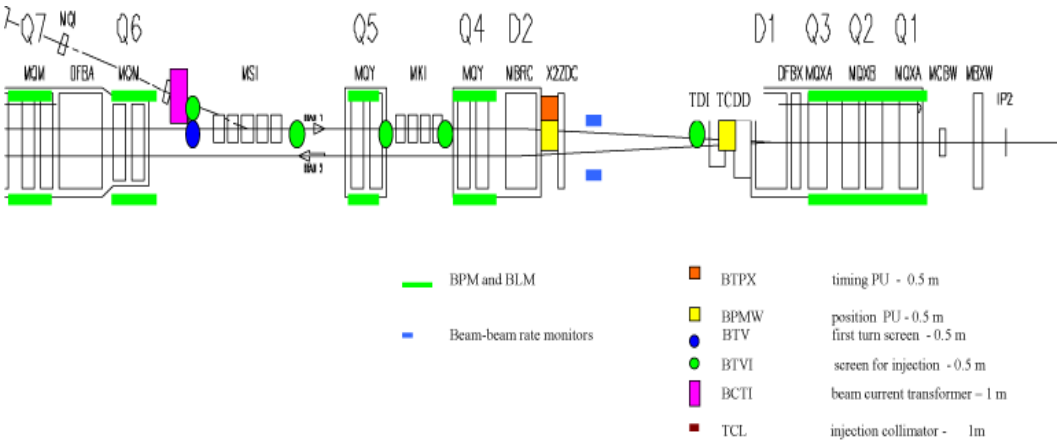

Fig. 2. Electromagnetic optics in the injection region.

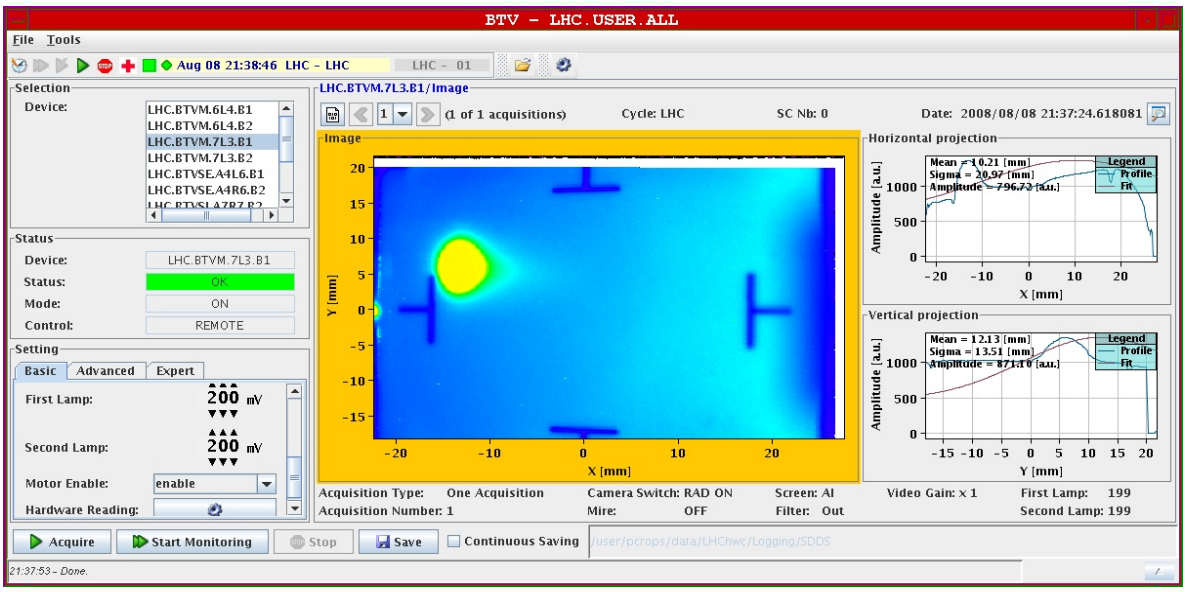

Fig. 3. First injection test: particle beam imaged at point 3.

The ATLAS magnet has been fully tested in the cavern, while the CMS test was completed on the surface. A new test is underway.

The injection of the opposite direction beam into point 8 towards point 7 was planned to occur around August 23rd, with first circulating beams expected by September 10th. The date of October 21st was chosen as the official inauguration day.

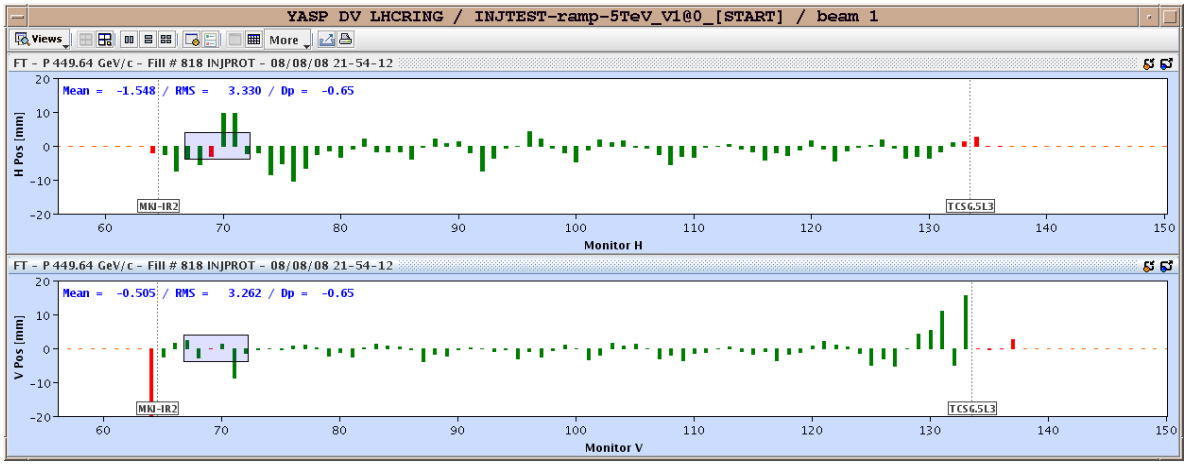

Fig. 4. The trajectory of the first injected beam.